Amana Technical Information — Refrigerator

ARS9167A	**PARS9167AB0**	**ARS9168A**	**PARS9168AB0**
	PARS9167AC0		**PARS9168AC0**
	PARS9167AS0		**PARS9168AW0**
	PARS9167AW0	**ARS9169A**	**PARS9169AS0**

- Due to a possibility of personal injury or property damage, always contact an authorized technician for service or repair of this refrigerator.
- Refer to Service Manual RS1300004 for more information on refrigerator installation, disassembly, icemaker, safety, testing, and troubleshooting.

⚠ CAUTION

All safety information must be followed as provided in Service Manual RS1300004.

⚠ WARNING

To avoid risk of electrical shock that can cause death or severe personal injury, disconnect unit from power before servicing unless tests require power. Discharge capacitors through a 10,000-ohm resistor before handling. Wires removed during disassembly must be replaced on correct terminals to ensure proper grounding and polarization.

Model	**ARS9167A**	**ARS9168A; ARS9169A**
Capacity	20.6 cu ft	20.6 cu ft
Electrical requirements separate circuit	115 VAC 60 Hz 15 amps	115 VAC 60 Hz 15 amps
Refrigerant type	R134a	R134a
Width without side extrusions	35.75"	35.75"
Depth without handle includes door extrusions	26.2"	26.6"
Height including top hinge cap	68.5"	68.9"

No Load Performance Controls in Normal Position																	
	Kw/24 hr ±0.4			**Percent Run Time ±10%**			**Cycles/24 hr ±25%**			**Refrigerator Compartment Average Food Temperature ±3°F**			**Freezer Compartment Average Food Temperature ±3°F**		
Ambient °F	65°	90°	110°	65°	90°	110°	65°	90°	110°	65°	90°	110°	65°	90°	110°
ARS9167A & ARS9168A& ARS9169A	1.2	2.5	4.0	31	63	100	26	19	0	35	35	35	1.5	0	-1

Temperature Relationship Test Chart												
	T-1 Outlet ±3°F		**T-1 Inlet ±3°F**		**T-3 Suction Line ±7°F**		**Average Total Wattage ±10%**		**Suction Pressure ±2 PSIG**		**Head Pressure ±5 PSIG**	
Ambient °F	65°	90°	65°	90°	65°	90°	65°	90°	65°	90°	65°	90°
ARS9167A & ARS9168A & ARS9169A	-20	-17	-17	-15	69	93	153	158	0	1	86	135

Component Specifications

⚠ WARNING

To avoid risk of electrical shock that can cause death or severe personal injury, disconnect unit from power before servicing unless tests require power. Discharge capacitors through a 10,000-ohm resistor before handling. Wires removed during disassembly must be replaced on correct terminals to ensure proper grounding and polarization.

Illustration	Component	Test Procedure	
A0282807 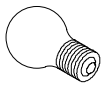	Bulb, upper refrigerator/freezer	Volt Watt	120/125VAC 60 watts
A3079001 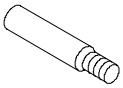	Bulb, lower refrigerator	Volt Watt	115/125 VAC 40 watts
M0360001	Bulb, cavity light	Volt Watt	115/125 VAC 6 watts
C8931608	Capacitor, auger motor	Volt Capacitance	210/220 VAC 15 Mfd +10% -5%
C8931612	Capacitor, compressor run	Volt Capacitance	220 VAC 15 Mfd +10% -5%
12049710 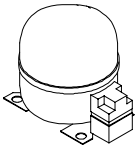	Compressor	Type BTUH Volt Watt Current Lock rotor Full load Resistance Run Windings Start Windings	Fan Cooled, R134a refrigerant 850 BTUH 115 VAC, 60 Hz 149 watts 21.3 amps 1.5 amps 2.60 ohms 4.35 ohms
R9900109 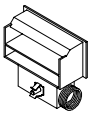	Control, damper	Settings #1 #4 #7	Closing temperatures 47°F 40°F 30°F
R0161092 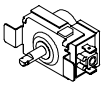	Control, freezer temperature	Settings #1–in #1–out #4–in #4–out #7–in #7–out	Temperatures 21.0°F 4.5°F 13.3°F -5.9°F 9.8°F -11.0°F

Component Specifications

⚠ WARNING

To avoid risk of electrical shock that can cause death or severe personal injury, disconnect unit from power before servicing unless tests require power. Discharge capacitors through a 10,000-ohm resistor before handling. Wires removed during disassembly must be replaced on correct terminals to ensure proper grounding and polarization.

Illustration	Component	Test Procedure	
B2150504	Drier	Drier must be changed every time the system is opened for testing or compressor replacement. Desiccant	(20) 8 x 12 4AXH - 7 M>S> -Grams
12049801	Heater, evaporator	Volt Wattage Resistance	115 VAC 450 ±5% watts 29 ±5% ohms
12501001 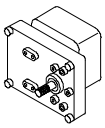	Motor, auger	Volt Rotation (facing end opposite shaft) RPM (no load) Watt Bimetal cut-out Opens Closes	115VAC, 60 Hz Power to blue and white leads is clockwise Power to white and orange leads is counterclockwise 17 ±3 RPM 120 ±20 watts 194°F ±9° 149°F ±9°
10884501	Motor, condenser	Volt Rotation (facing end opposite shaft) RPM Watt Current Resistance	115 VAC, 60 Hz Clockwise 1300 RPM 10.0 watts 0.15 amps 220 ±10% ohms
10513803 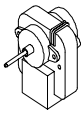	Motor, evaporator fan (Used on all units with serial No. prefix 0006 through June 2000. Diameter of fan blade on these units is 5.25")	Volt Rotation (facing end opposite shaft) RPM Watt	115 VAC, 60 Hz Clockwise 2500 RPM 12 ±15% watts
10449505 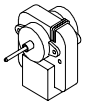	Motor, evaporator fan (Used on all units with serial No. prefix 0007, starting July 2000. Diameter of fan blade on these units is 3.85")	Volts Rotation (facing end opposite shaft) Speed Watts	115 VAC, 60 Hz Clockwise 2900 RPM 9.1 ±15% watts
10377015	Overload, 4TM	Volt Ult. Trip amps @ 158°F (70°C) Close temperature Open temperature Short time trip (seconds) Short time trip (amps @77°F (25°C))	115 VAC 3.51 amps 142°F (61°C ±9°) 257°F (125°C ±5°) 10 seconds ±5 14 amps

Component Specifications

⚠ WARNING

To avoid risk of electrical shock that can cause death or severe personal injury, disconnect unit from power before servicing unless tests require power. Discharge capacitors through a 10,000-ohm resistor before handling. Wires removed during disassembly must be replaced on correct terminals to ensure proper grounding and polarization.

Illustration	Component	Test Procedure	
10097202	Relay, ptc	Resistance With power off check: Across terminals 2 & 3 Shorted Open	 4–6 ohms 0 ohms Very high or infinite ohms
12466102	Switch, refrigerator light	Type Volt Current	SPDT 125/250 VAC 5.0/5.0 amps
12466101	Switch, freezer light/auger interlock	Type Volt Current	DPST, NC 125/250 VAC 5.0 amps
12419601	Switch, limit	Type Volt Current	SPST, NO 125/250 VAC 10.0 amps
12017823	Thermostat	Volt Watt Current Resistance across terminals Above 48° ±5°F Below 15° ±7°F Between 48° ±5°F and 15° ±7°F	120/240 VAC 1000 watts 10/5 amps Open Closed Will stay in current state (open or closed) until either 48° ±6°F or 15° ±8°F is reached.
10530703	Timer, defrost	Volt Defrost period (minutes) Defrost cycle (hours)	120 VAC, 60 Hz 33 ±3.6 8
12313403	Valve, water (primary)	Volt Watt Purple coil Brown coil Water pressure (inlet) Max Min Fill rate	120 VAC, 60 Hz 20 watts 20 watts 120 PSI 20 PSI 137 +14 -24 CC's at 7.5 seconds
12313404	Valve, water (secondary)	Volt Watt Purple coil Brown coil Water pressure (inlet) Max Min Fill rate	120 VAC, 60 Hz 20 watts 20 watts 120 PSI 20 PSI 137 +14 -24 CC's at 7.5 seconds

Troubleshooting

⚠ WARNING

To avoid risk of electrical shock that can cause death or severe personal injury, disconnect unit from power before servicing unless tests require power. Discharge capacitors through a 10,000-ohm resistor before handling. Wires removed during disassembly must be replaced on correct terminals to ensure proper grounding and polarization.

Door gaskets	Gaskets foamed in place between door liner and door pan during manufacture.	If gasket is damaged, replace with appropriate service gasket kit. Consult your parts manual for kit part numbers. Follow instructions in kit.
Refrigerator and freezer doors	Foamed as assemblies during manufacture.	Door liner and door pan are not replaceable. If either is damaged, door must be replaced. Consult your service manual for door replacement instructions.
Water tube	Water tube for dispenser runs through conduit in freezer door.	To replace water tube: 1. Remove toe grille. 2. Remove plastic union nut at tube splice below freezer door. 3. Attach nylon cord or fishing line to upper end of water tube. 4. Pull tube out of door from bottom. Be sure to leave about a foot of cord dangling at both ends of conduit. Attach new water tube to lower end of cord. Grasp upper end of cord and pull tube though conduit, into place.
Water head assembly and filter	Unit ships with bypass plug in water head assembly and filter canister in crisper. Bypass plug should be retained in case filter becomes plugged and new cartridge is not readily available.	To remove water filter bracket and filter head assembly: 1. Loosen two screws securing water filter bracket to fresh food liner. 2. Slide bracket with filter head forward approximately ½". Bracket drops down when screw heads reach keyhole slots. 3. Unscrew filter head from bracket. Detach water tubes from filter head by pushing in on collars while pulling out on tubes. To remove bypass or filter from head assembly, turn bypass or filter a quarter-turn counterclockwise and pull down. It is not necessary to shut off water supply before changing filter.

Troubleshooting

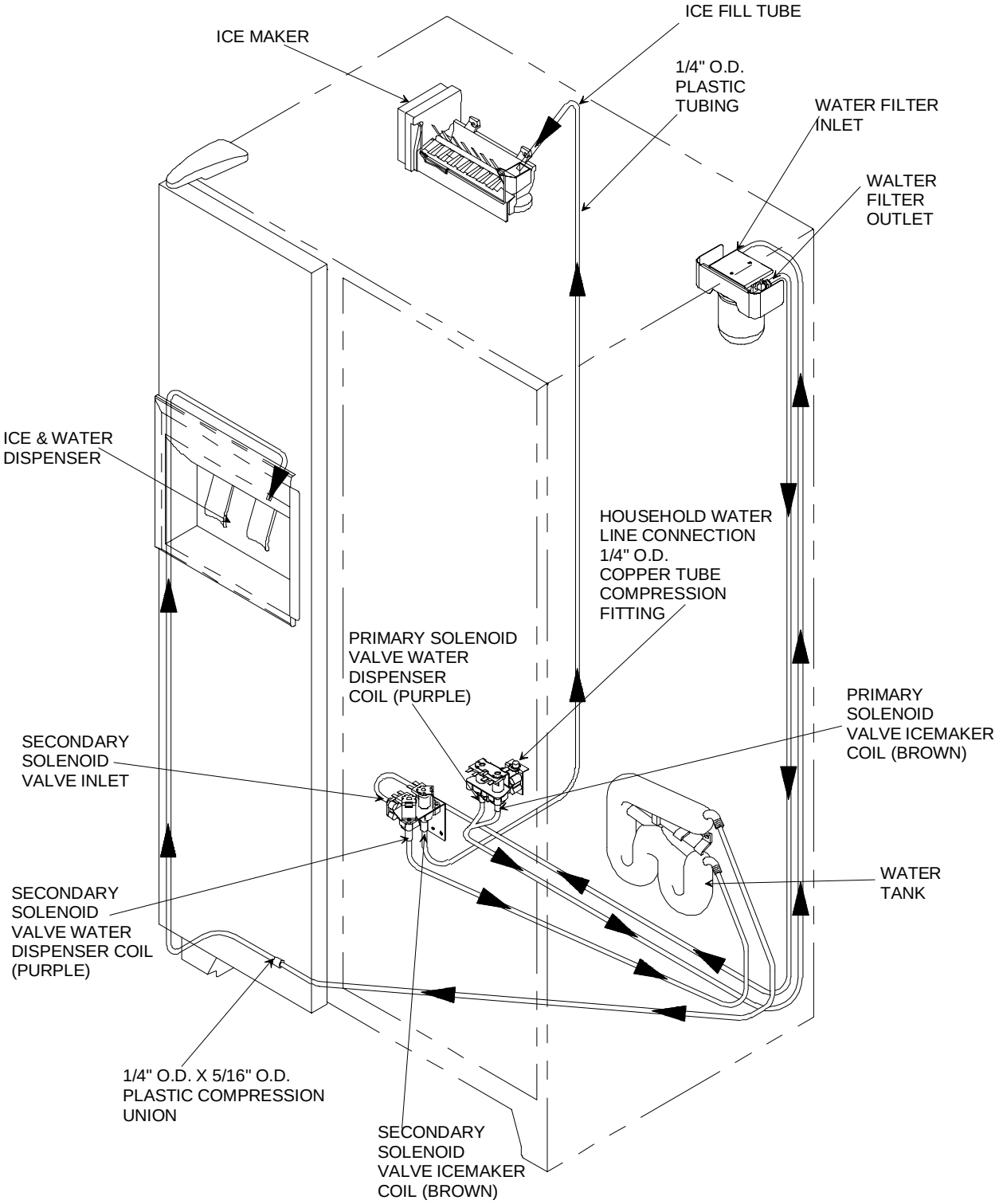

Water Flow Diagram

Troubleshooting

Water Dispenser Rates

	Seconds to dispense 10 Oz. Water					
Supply Pressure	20 psig*	30 psig*	40 psig*	50 psig*	60 psig*	70 psig*
Filter model with bypass installed.	18.1	14.3	12.2	10.8	9.8	9.0
Filter model with new filter installed.	22.0	17.3	14.2	12.8	11.5	10.4

*Amana specifies a minimum supply pressure of 35 psig for water filter units. Minimum pressure requirement is to insure water valves close and sufficient water volume is available to fill ice maker. Proper fill is 140 cc of water in 7.5 seconds. Failure of water valves to close because of low pressure will result in icemaker fill-tube freeze-up or dripping at cavity.

Ice 'N Water™ Electronic Dispenser Control

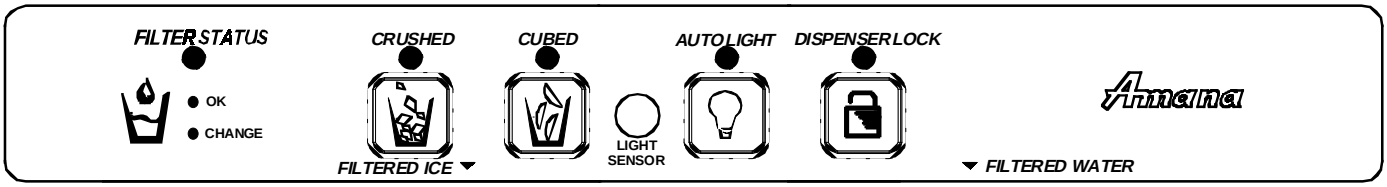

Ice Dispenser Operation

Select *CRUSHED* or *CUBED* mode by pushing the button on the dispenser panel. A green indicator light above the button indicates the current selection. Selection mode may not be changed while ice dispenser is in operation.

Dispenser Light

Light activates at full power when dispensing ice or water. A sensor activates light at half-power when light level around refrigerator is low. Activate or deactivate sensor by pushing *AUTO LIGHT* button located on control façade. Green light above *AUTO LIGHT* button indicates sensor is active.

Dispenser Lock

Prevents operation of water and ice dispensers. To activate or deactivate lock, press and hold *DISPENSER LOCK* button for 3 seconds. Green light above button indicates dispenser lock.

Automatic Lock Out

Shuts down both ice and water mechanisms of dispenser when either mechanism has run continuously for 5 minutes. To return power to dispenser, press and hold *DISPENSER LOCK* for 3 seconds. Auger motor shuts off automatically after 3 minutes of continuous operation. After about 3 minutes in shut-off state, auger motor resets automatically.

Filter Status Light

Filter light reminds user to replace water filter after cumulative flow exceeds filter capacity. Green light indicates filter in good condition. Change light indicates filter replacement needed. Once filter light turns red, it remains red until reset. To reset filter indicator, press both *DISPENSER LOCK* and *AUTO LIGHT* buttons simultaneously and hold 4 seconds. Green light will flash 3 times when indicator resets.

NOTE: Filter status light turns red after cumulative flow exceeds filter capacity even if bypass is installed and unit is used without filter cartridge.

Troubleshooting

⚠ WARNING

To avoid risk of electrical shock that can cause death or severe personal injury, disconnect unit from power before servicing unless tests require power. Discharge capacitors through a 10,000-ohm resistor before handling. Wires removed during disassembly must be replaced on correct terminals to ensure proper grounding and polarization.

Electronic Dispenser Troubleshooting Guide

Symptom	Possible Cause	Test Procedure	Repair
No LED's lit.	Switch failure in freezer door.	With refrigerator powered, open freezer door. Press freezer door switch in. If freezer light does not turn off, switch is defective.	Replace switch and retest.
	Incorrect harness wiring.	Verify wire colors on 10-pin connector.	Correct wiring and retest.
	Harness: Open heater, open white wire between splice and heater, or open brown wire.	Disconnect power. Remove 10-pin connector and measure resistance between white and brown wires. Reading should be 1.4kΩ ±105Ω.	Repair connector or wire if possible. If not, connect redundant heater. See Instruction 1on Page 10 for wiring diagram. Replace door if both heaters have failed.
	Open black wire.	Disconnect power. Unplug 10-pin connector from PCB and attach ohmmeter probe to harness Pin 10 (black wire). Remove top hinge cover. Disconnect 4-pin plug. Attach second meter probe to harness Pin 2 (black wire). Meter should read less than 1Ω.	Repair black wire if possible. If not, cut black wire at top hinge plug and at 10-pin connector. Splice violet wire (spare) in door harness between black wire at top hinge plug and black wire at 10-pin connector.
	Open white wire between top hinge and cavity.	Disconnect power. Unplug 10-pin connector from PCB and attach ohmmeter probe to harness Pin 1 (white wire). Remove top hinge cover. Disconnect 4-pin plug. Attach second meter probe to harness Pin 1 (white wire). Meter should read less than 1Ω.	Repair white wire if possible. If not, use violet wire (spare) to connect redundant heater. See Instruction 2 on Page 10 for wiring diagram. Replace door if both heaters have failed.
	PCB: Power supply.	If no LED's turn on and wiring checks OK, PCB is defective.	Replace PCB.
No water, Auger motor operates.	Failed water actuator switch.	Remove both leads from switch and measure resistance across switch terminals. Press finger against actuator to close switch. Resistance should read less than 1Ω in this position and greater than 1 M Ω when actuator switch is open.	Replace switch.
	Harness: Open red wire between ice switch and water switch.	Inspect switch area. Test red wire for continuity.	Repair wire and retest.
	Harness: Gray wire not attached to the water switch.	Inspect switch area.	Reattach gray wire and test for continuity of gray wire.
	Incorrect harness wiring.	Verify gray (Pin 5) and red (Pin 4) wires are correctly positioned in the 10-pin connector.	Correct wiring and retest.
	Harness: Open gray wire between water switch and solenoid.	Test gray wire for continuity to door hinge. Test light blue wire from door hinge to blue or violet wire at solenoid.	Repair or replace this wire.
	Harness: Open water valve.	Measure resistance across water valve. Refer to component specifications in this document for tolerances.	Replace water valve.
Water dispenses but no cavity light when water is actuated.	Harness: Open gray wire between ice switch and 10-pin connector.	Test gray wire for continuity from water switch to 10-pin connector.	Repair wire or connector.

Troubleshooting

⚠ WARNING

To avoid risk of electrical shock that can cause death or severe personal injury, disconnect unit from power before servicing unless tests require power. Discharge capacitors through a 10,000-ohm resistor before handling. Wires removed during disassembly must be replaced on correct terminals to ensure proper grounding and polarization.

Symptom	Possible Cause	Test Procedure	Repair
No auger motor. Cavity light comes on when water is actuated but not when ice is actuated.	Incorrect harness wiring.	Verify correct wiring of 10-pin connector.	Correct wiring and retest.
	Harness: Open black/red wire between connector and auger switch.	Test black/red wire for continuity.	Repair wire or replace door.
LED's operate but no ice or water. Cavity light does not come on when ice or water is actuated. Night light works properly.	Operational error: Lock mode may be enabled.	Press and hold *DISPENSER LOCK* button for 4 seconds	Customer education.
	Harness: Open red wire in harness (Pin 4 on 10-pin connector) between connector and auger switch.	Disconnect power. Unplug 10-pin connector from PCB and attach ohmmeter probe to harness Pin 4 (red wire). Remove red wire from auger switch. Attach second ohmmeter probe to red wire. Look for less than 1Ω resistance.	Repair wire or terminal.
	PCB: Lock relay stuck open.	Disconnect power. Remove 10-pin connector from PCB. On PCB, measure resistance between Pin 10 and Pin 4. Meter should read less than 2Ω.	Replace PCB.
LED's operate. Cavity light comes on when ice or water actuated, but no auger motor.	Auger motor: Open winding or connection.	Perform standard auger motor test.	Replace auger motor.
No night light. Cavity light works properly.	PCB defective.	Verify LED above *AUTO LIGHT* button is lit. Completely cover sensor lens with coin. If night-light turns on, then product is operating within spec. Otherwise, PCB needs replaced.	Replace PCB.
No light at all. Everything else works properly.	Bulb burnt out.	Measure resistance across bulb filament. If higher than 1k Ω, replace bulb.	Replace bulb.
	Harness: Open white wire between cavity light and splice in door. Wire not connected at light socket.	Inspect wire for proper connection at 10-pin connector and cavity-light socket. Ohmmeter should show short between white wire at cavity light and neutral on the power cord.	Repair or replace white wire or connection, or splice in violet wire (spare) per Instruction 1 (see Page 8), if white wire is not accessible.
	Harness: Open white wire between 10-pin connector and cavity light.	Test white wire for continuity.	Repair or replace white wire or terminal.
	Harness: Yellow wire open or not connected between 10-pin connector and light socket.	Test yellow wire for continuity.	Repair or replace yellow wire or attach wire to light socket.
	Incorrect harness wiring.	Check color-coding of wires against wiring diagram.	Correct wiring and retest.
	PCB failure.	If LED's turn on, PCB is defective.	Replace PCB.
Ice all the time.	Switch failure: shorted auger switch.	Remove both leads from switch. Measure resistance across switch terminals. Resistance is greater than 1MΩ in open position and less than 1Ω when switch is closed.	Replace auger switch.
	PCB failure.	If LED's turn on, PCB is defective.	Replace PCB.

Troubleshooting

⚠ WARNING

To avoid risk of electrical shock that can cause death or severe personal injury, disconnect unit from power before servicing unless tests require power. Discharge capacitors through a 10,000-ohm resistor before handling. Wires removed during disassembly must be replaced on correct terminals to ensure proper grounding and polarization.

Symptom	Possible Cause	Test Procedure	Repair
Water all the time.	Shorted water solenoid switch.	Remove leads from switch and measure resistance across switch terminals. Resistance is greater than 1MΩ in open position and less than 1Ω when actuator is pressed closed.	Replace water solenoid switch.
	PCB failure.	If no LED's turn on PCB is defective.	Replace PCB.
	Water valve stuck open.	Remove power to the refrigerator. If water still flows through the valve, valve is bad or there is low water pressure.	Replace the water valve or correct household water pressure.
Night-light on all the time. Cavity light works properly, comes on when ice or water actuated.	Operational error: Lens is dirty or covered with contamination.	Make sure nothing covers or masks photosensitive lens.	Clean lens area of control.
	PCB: Defective photo-sensor circuit.	If night-light is on all the time and procedure above has been preformed, PCB is defective.	Replace PCB.
Cavity light all the time. Ice and water work OK.	Incorrect harness wiring.	Verify wire colors on 10-pin connector against the wiring diagram.	Correct wiring and retest.
Filter LED never changes to red.	Operational error: User mistakenly resets filter counter.	Demonstrate reset operation to customer.	Customer education.

Troubleshooting

⚠ WARNING

To avoid risk of electrical shock that can cause death or severe personal injury, disconnect unit from power before servicing unless tests require power. Discharge capacitors through a 10,000-ohm resistor before handling. Wires removed during disassembly must be replaced on correct terminals to ensure proper grounding and polarization.

Instruction 1: Wire in redundant heater when heater-circuit failure occurs between heater splice and dispenser cavity (See Wiring Diagram). Cut white wire two inches away from 10-pin connector. Splice one of the Blk/Wh leads from wire harness to loose ends of the white wire. Next, cut the brown wire two inches from the 10-pin connector. Splice the other Blk/Wh wire to the two-inch stub of the brown wire at Pin 3 of the 10-pin connector. Tape off the remaining, loose end of the brown wire.

NOTE: Never wire in both heaters at the same time. Doing so will ruin the PCB.

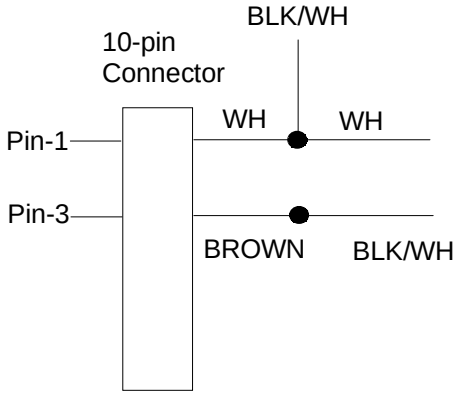

This is how wiring should look at the 10-pin connector after redundant heater is wired into system per Instruction 1.

Instruction 2: Wire in redundant heater when heater-circuit failure occurs in white wire between top hinge and heater splice (See Wiring Diagram). Cut white wire two inches from 4-pin connector at top hinge. Splice violet wire onto two-inch stub of white wire at 4-pin connector. Tape off remaining, loose end of white wire. In cavity, cut white wire two inches from 10-pin connector. Splice violet wire and one Blk/Wh wire to two-inch stub of white wire at 10-pin connector. Tape off loose end of white wire. Next, cut brown wire two inches from Pin 3 on 10-pin connector. Splice second Blk/Wh wire to two-inch stub of Brown wire at 10-pin connector. Tape off loose end of brown wire.

NOTE: Never wire in both heaters at the same time. Doing so will ruin the PCB.

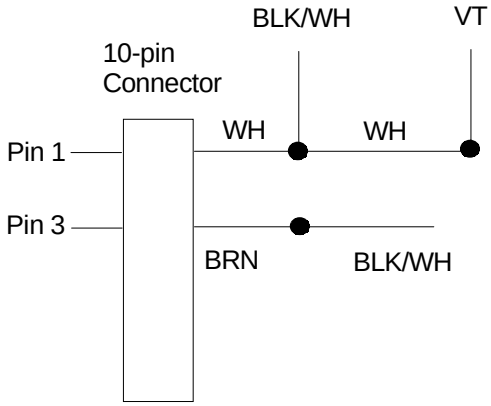

This is how wiring should look at the 10-pin connector after redundant heater is wired into system per Instruction 2.

Schematic Drawing

⚠ WARNING

To avoid risk of electrical shock that can cause death or severe personal injury, disconnect unit from power before servicing unless tests require power. Discharge capacitors through a 10,000-ohm resistor before handling. Wires removed during disassembly must be replaced on correct terminals to ensure proper grounding and polarization.

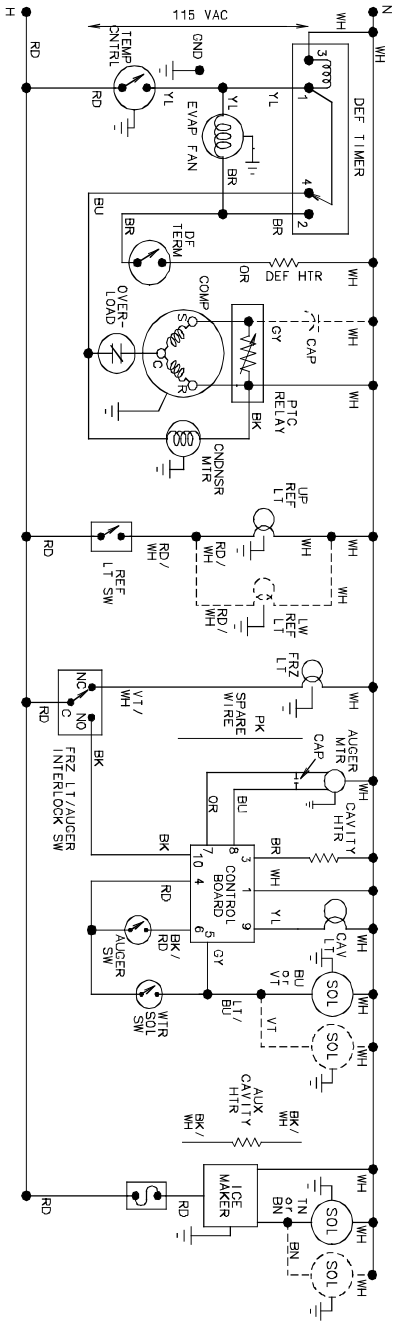

ARS9167A	**PARS9167AB0**	**ARS9168A**	**PARS9168AB0**
	PARS9167AC0		**PARS9168AC0**
	PARS9167AS0		**PARS9168AW0**
	PARS9167AW0	**ARS9169A**	**PARS9169AS0**

Wiring Diagram

⚠ WARNING

To avoid risk of electrical shock that can cause death or severe personal injury, disconnect unit from power before servicing unless tests require power. Discharge capacitors through a 10,000-ohm resistor before handling. Wires removed during disassembly must be replaced on correct terminals to ensure proper grounding and polarization.

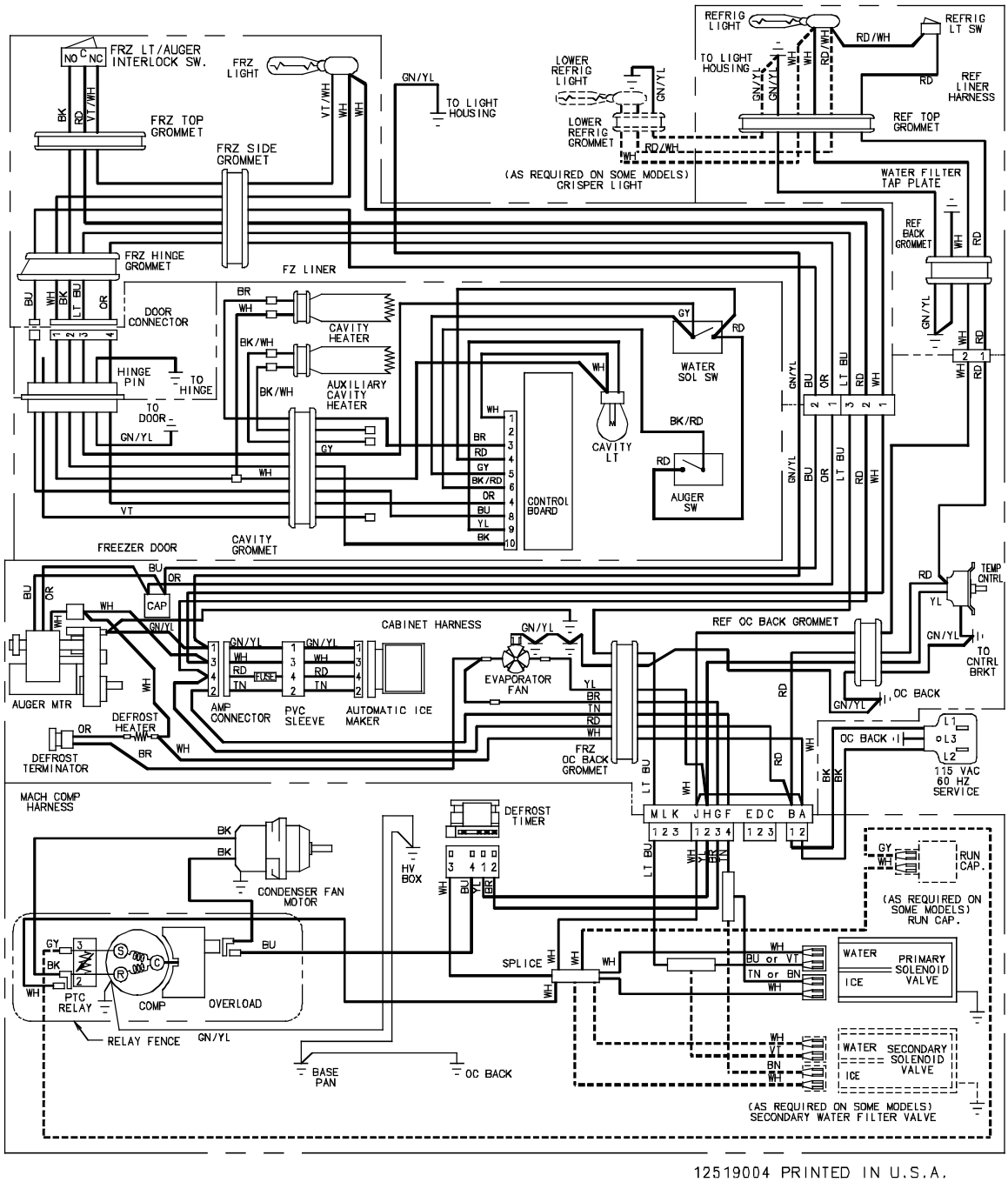

ARS9167A	**PARS9167AB0**	**ARS9168A**	**PARS9168AB0**
	PARS9167AC0		**PARS9168AC0**
	PARS9167AS0		**PARS9168AW0**
	PARS9167AW0	**ARS9169A**	**PARS9169AS0**